B:5 Horizontal Bandsaw

Owner's Manual



⚠WARNING!

Read and understand all instructions and responsibilities before operating. Failure to follow safety instructions and labels could result in serious injury.

Dake Corporation
1809 Industrial Park Dr
Grand Haven, MI 49417

Phone: 800.937.3253

www.dakecorp.com

1809 Industrial Park Dr
Grand Haven, MI 49417
www.dakecorp.com

Table of Contents

DAKE STANDARD LIMITED WARRANTY 2
RETURN & REFUND POLICY 4
DAKE STANDARD TERMS & CONDITIONS OF SALE....5
SPECIFICATIONS....6
SAFETY 7
Intended Use....8
Grounding Instructions....8
Defintions 9
OVERVIEW....10
SETUP AND ASSEMBLY....11
Test Run 15
OPERATING THE MACHINE....16
Overview....16
Before Use....16
ADJUSTMENTS....18
Tensioning and De-tensioning the Blade 18
Adjusting the Handle 18
Adjusting the Bottom Stop....18
Adjusting the Blade Speed 19
Adjusting the Blade Guide 19
Adjusting the Cutting Angle 19
Adjusting and Using the Vise....20
CHANGING THE BLADE... 21
BLADE TOOTH SELECTION....22
SPEED FEED MATERIAL GUIDE:....23
CHIP INSPECTION CHART..... 24
TROUBLESHOOTING 25
MAINTENANCE 27
ELECTRIC SCHEMATIC....28
EXPLODED VIEWS & PARTS LISTS 29
ORDERING INFORMATION 32

1809 Industrial Park Dr
Grand Haven, MI 49417
www.dakecorp.com

DAKE STANDARD LIMITED WARRANTY

Finished Machines

Dake warrants to the original purchaser the finished machine manufactured or distributed by it to be free from defects in material and workmanship under normal use and service within 1 year (12 months) from the delivery date to the end user.

Parts

Dake warrants to the original purchaser the component part manufactured or distributed by it to be free from defects in material and workmanship under normal use and service within 30 days from the delivery date to the end user.
The standard limited warranty includes the replacement of the defective component part at no cost to the end user.

Sale of Service (Repairs)

Dake warrants to the original purchaser the component part repaired by Dake Corporation at the manufacturing facility to be free from defects in material and workmanship under normal use and service within 90 days from the return date to the end user, as it pertains to the repair work completed. The standard limited warranty includes repair of the defective component part, at no cost to the end user.

Warranty Process

Subject to the conditions hereinafter set forth, the manufacturer will repair or replace any portion of the product that proves defective in materials or workmanship. The manufacturer retains the sole right and option, after inspection, to determine whether to repair or replace defective equipment, parts or components. The manufacturer will assume ownership of any defective parts replaced under this warranty.
All requested warranty claims must be communicated to the distributor or representative responsible for the sale. Once communication has been initiated, Dake Customer Service must be contacted for approval:

Phone: (800) 937-3253
Email: customerservice@dakecorp.com

When contacting Dake, please have the following information readily available:

- Model #
- Serial #
- Sales Order #

Purchasers who notify Dake within the warranty period will be issued a Case number and/or a Return Material Authorization (RMA) number. If the item is to be returned per Dake's request, the RMA number must be clearly written on the exterior packaging. Any item shipped to Dake without an RMA will not be processed.

Revision: 01 (07/07/2025)

1809 Industrial Park Dr
Grand Haven, MI 49417
www.dakecorp.com

Warranty Exceptions:

The following conditions are not applicable to the standard limited warranty:

(a) Part installation or machine service was not completed by a certified professional, and is not in accordance with applicable local codes, ordinances and good trade practices.
(b) Defects or malfunctions resulting from improper installation or failure to operate or maintain the unit in accordance with the printed instructions provided.
(c) Defects or malfunctions resulting from abuse, accident, neglect or damage outside of prepaid freight terms.
(d) Normal maintenance service or preventative maintenance, and the parts used in connection with such service.
(e) Units and parts which have been altered or repaired, other than by the manufacturer or as specifically authorized by the manufacturer.
(f) Alterations made to the machine that were not previously approved by the manufacturer, or that are used for purposes other than the original design of the machine.

1809 Industrial Park Dr
Grand Haven, MI 49417
www.dakecorp.com

RETURN & REFUND POLICY

Thank you for purchasing from Dake! If you are not entirely satisfied with your purchase, we are here to help.

Returns

All Dake manufactured / distributed machines, parts and couplings include a 30-day return option. These policies are valid from the date of final shipment to the end user.

To be eligible for a return, the item must be unused and in the same condition as received.

All requested warranty claims must be communicated to the distributor or representative responsible for the sale. Once communication has been initiated, Dake Customer Service must be contacted for approval:

Phone: (800) 937-3253
Email: customerservice@dakecorp.com

Once the return request has been approved by Customer Service, a representative will supply a Return Material Authorization (RMA) number. The returned item must have the provided RMA number clearly marked on the outside packaging. Any item received without an RMA number clearly visible on the packaging will not be processed.
An RMA number can only be provided by the Dake Customer Service team and must be obtained prior to the return shipment.

Refunds

Once the item has been received and inspected for damages, a representative will notify the requestor referencing the provided RMA number.

If the return is approved, a refund will be issued to the original method of payment, less a 20% restocking fee. The restocking fee may be waived if an order is placed at the time of return with like-value merchandise.

Transportation costs are the responsibility of the end user and will not be credited upon return approval.

Any item that is returned after the initial 30 days or has excessive/obvious use will not be considered for a full refund.

1809 Industrial Park Dr
Grand Haven, MI 49417
www.dakecorp.com

DAKE STANDARD TERMS & CONDITIONS OF SALE

All proposals and quotations for the original sale of our products are subject to the following terms and conditions:

ACCEPTANCE OF ORDER: All orders are subject to acceptance by Dake at its main office in Grand Haven, Michigan.

APPLICABLE LAWS: This quotation or acceptance shall be governed in all respects by the laws of the State of Michigan.

CANCELLATION: We reserve the right to cancel and/or refuse to complete your order if, in our opinion, you have not established credit to promptly meet the payment terms of your order. Any cancellation from the Purchaser may be subject to a 10% cancellation fee for any of our non-standard machinery upon the discretion of Dake. All custom or special quotes will not be eligible for cancellation, nor returns.

DELIVERY: The proposed shipment date is an estimate and is contingent upon causes beyond Dake's control. Under no circumstances shall Dake have any liability for loss of use or for any direct or consequential damages resulting from delay. All shipments from the Dake facilities are F.O.B.

FREIGHT CLAIM: Damage freight claims must be submitted to Dake within thirty (30) days of shipment from Dake's facility. If shipment for order was set up by the Purchaser, Dake is not liable to handle the freight claims.

PERMITS AND COMPLIANCE: Dake shall not be responsible for obtaining any permits, inspections, certifications, or licenses required for the installation or use of the equipment. Dake makes no promise or representation that the equipment or any services to be furnished by Dake will conform to any federal, state, or local laws, ordinances, regulations, codes or standards.

PRICES: Unless otherwise agreed to in writing, all prices are F.O.B. our plant in Grand Haven, Michigan and Grand Prairie, Texas. In any event, the quoted prices for component parts become invalid ten (10) days after date of quotation, and machinery may become invalid sixty (60) days after date of quotation. Unless otherwise specified in Dake's quotation, installation services and final on-site adjustments are not included in the quotation.

TAXES: Prices do not include taxes. If any sales, use or similar tax is payable to Dake in connection with any transaction or part thereof between the Purchaser and Dake with respect to goods delivered, the Purchaser will, upon demand, pay to Dake the amount of any such tax. If you are tax exempt, please include your exemption document when submitting your order.

TERMS OF PAYMENT: Terms of payment are as stated in Dake's quotation subject to credit approval by our home office. Dake will invoice Purchaser when the equipment is completed and ready for shipment. Payment terms run from invoice date. Purchaser may be required to issue a down payment before production of order and shipment, at the discretion of Dake Accounting. For credit card purchases, a 3.5% processing fee may be applicable to the order. The following states are exempt from the 3.5% processing fee: CA, CO, KS, OK, TX, FL, NY, CT, MA, and ME. Dake's preferred method of payment is as follows: ACH Wire and credit card. Checks will be accepted but may cause delay in order processing. Below is our billing address:

1809 Industrial Park Drive, Grand Haven, MI 49417

WARRANTY If, within a period of one (1) year from date of shipment, any part of any equipment sold by Dake is defective in material or workmanship and is so found after inspection by Dake, it will be replaced or repaired at the option of Dake, providing the equipment has been given normal and proper usage and is still the property of the original Purchaser. Purchased components such as Micro Drop mist system or the like, installed as a part of Dake equipment are warranted only to the extent of the original Manufacturer's warranty. Dake is not responsible for any service work performed unless authorized in advance.

THE FOREGOING WARRANTY IS EXCLUSIVE AND IN LIEU OF ALL OTHER WARRANTIES WHETHER WRITTEN, ORAL OR IMPLIED (INCLUDING ANY WARRANTY OF MERCHANTABILITY OR FITNESS FOR PARTICULAR PURPOSE). UNDER NO CIRCUMSTANCES SHALL DAKE BE LIABLE FOR ANY INCIDENTAL OR CONSEQUENTIAL DAMAGES.

1809 Industrial Park Dr
Grand Haven, MI 49417
www.dakecorp.com

SPECIFICATIONS

Item	Specifications (Imperial)
Voltage	120 V
Motor	1hp
Cutting capacity 90°	Circular bar: 4.92 in, Rectangular bar: 5.12 in × 4.92 in
Cutting capacity 45°	Circular bar: 2.99 in, Rectangular bar: 2.99 in × 2.99 in
Cutting capacity 60°	Circular bar: 1.97 in, Rectangular bar: 1.97 in × 1.97 in
Blade size	0.51 × 0.026 × 56.69 in
Bow-Saw	Aluminum
Blade speed	82-262 FPM
Packing dimensions	28.5 × 14.76 × 17.56 in
Noise level	About 60 dB (A)
Machine Dimensions Assembled (L x W x H)	26.4 x 12.2 x 18.9" (670 x 310 x 480 mm)
Machine Weight (Gross)	50.7 Lbs (23kg)
Machine Weight (Net)	46.3 Lbs (21 kg)

In the space provided record the serial number and model number of the machine. This information is only found on the black and gold Dake tag shown below. If contacting Dake this information must be provided to assist in identifying the specific machine.



Serial No.	
Model No.	
Install Date:	

1809 Industrial Park Dr
Grand Haven, MI 49417
www.dakecorp.com

SAFETY

This is the safety alert symbol. When you see this symbol on your press be alert to the potential for personal injury.

Employer is responsible to perform a hazard/PPE assessment before work activity.

Label Placement View

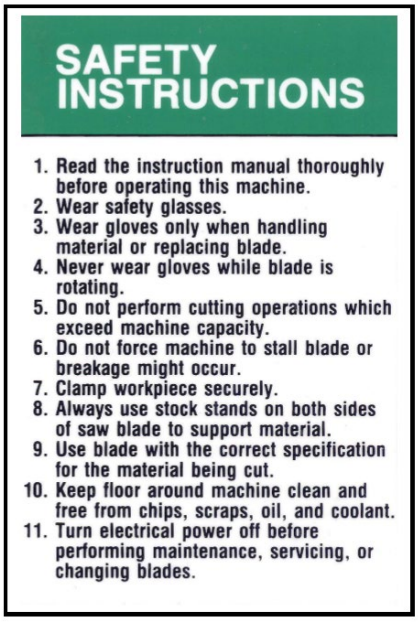

Label Part No. 84605



Label Part No. 84604



Label Part No. 300168

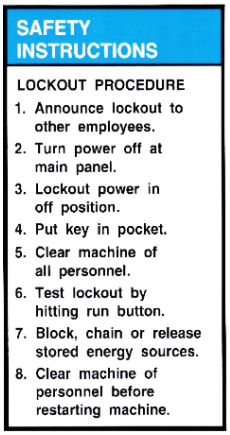

Label Part No. 76462



Label Part No. 84399



Label Part No. 84395



Label Part No. 84487

1. Keep Guards in Place: Ensure all guards are in place and working.
2. Remove Adjusting Keys and Wrenches: Always check that keys and wrenches are removed before turning on tools.
3. Keep Work Area Clean: A tidy work area prevents accidents.
4. Avoid Dangerous Environments: Do not use power tools in damp or wet locations. Keep the area well-lit.
5. Keep Children Away: Ensure visitors maintain a safe distance from the work area.
6. Make Workshop Kid-Proof: Use padlocks, master switches, or remove starter keys.
7. Do Not Force Tools: Use tools at their designed rate for better and safer performance.
8. Use the Right Tool: Do not force tools or attachments to do jobs they weren't designed for.
9. Use Proper Extension Cords: Ensure cords are in good condition and heavy enough to carry the current. Refer to Table 1 for correct sizing.
10. Wear Proper Apparel: Avoid loose clothing, jewelry, and secure long hair. Use non-slip footwear.
11. Always Use Safety Gear: Wear safety glasses, ear protection, and dust masks if needed.
12. Secure Work: Use clamps or a vise to hold work securely.
13. Do Not Overreach: Maintain proper footing and balance.
14. Maintain Tools with Care: Keep tools sharp and clean. Follow maintenance instructions.
15. Disconnect Tools Before Servicing: Always disconnect tools before servicing or changing accessories.
16. Reduce Unintentional Starting: Ensure the switch is off before plugging in.
17. Use Recommended Accessories: Consult the owner's manual for proper accessories to avoid injury.
18. Never Stand on Tool: Serious injury can occur if the tool tips or if the cutting tool is unintentionally contacted.
19. Check Damaged Parts: Inspect and ensure damaged parts are repaired or replaced before use. Check for alignment, binding, breakage, and proper operation.
20. Direction of Feed: Feed work against the direction of the blade or cutter's rotation.

Never Leave Tool Running Unattended: Turn off the power and wait for the tool to stop completely. Remove the switch key and store it in a safe place, inaccessible to children and unqualified users.

-WEAR EYE PROTECTION.
-DO NOT REMOVE JAMCUT OFF PIECES UNTIL BLADE HAS STOPPED.
-MAINTAIN PROPER ADJUSTMENT OF BLADE TENSION, BLADE GUIDES, AND TRUST BEARING.
-ADJUST UPPER GUIDE TO JUST CLEAR WORKPIECE.
-HOLD WORKPIECE FIRMLY AGAINST TABLE

Intended Use

The tool is intended to cut steel, iron, copper, etc. NEVER USE THIS TOOL TO CUT WOOD AND EXPLOSIVE METAL MATERIAL.

Grounding Instructions

In case of malfunction or breakdown, grounding provides a path of least resistance for electric current to reduce the risk of electric shock. This tool has an electric cord with an equipment-grounding conductor and a grounding plug. The plug must be connected to a matching outlet that is properly installed and grounded according to local codes and ordinances.

Do not modify the provided plug. If it does not fit the outlet, have a qualified electrician install the proper outlet. Improper connection of the equipment-grounding conductor can result in electric shock. The conductor with green insulation, with or without yellow stripes, is the equipment-grounding conductor. If repair or replacement of the electric cord or plug is necessary, do not connect the equipment-grounding conductor to a live terminal. Consult a qualified electrician or service personnel if the grounding instructions are unclear or if there is doubt about whether the tool is properly grounded.

1809 Industrial Park Dr
Grand Haven, MI 49417
www.dakecorp.com

Defintions

Blade – The continuous band of toothed metal that performs the cutting action.

Blade Guides – Devices that support and align the blade during cutting to reduce deflection.

Blade Tension – The tightness of the blade, which must be adjusted properly for safe and accurate cuts.

Blade Speed – The speed at which the blade moves, usually measured in surface feet per minute (SFPM) or meters per minute (MPM).

Deflection – How much the blade bends or flexes sideways when pushed or stressed.

Guide Arms – Adjustable arms that hold the blade guides; positioned close to the workpiece to minimize blade flex.

Vise – The clamp that holds the material steady during cutting.

Bed/Table – The flat surface on which the workpiece sits while being cut.

Coolant System – A pump and nozzle setup that sprays coolant to reduce heat and extend blade life.

Feed Rate – The speed at which the blade advances into the material; can be gravity, hydraulic, or manual.

Cutting Capacity – The maximum size (diameter or rectangle) the saw can cut.

Miter Cutting – The ability to angle the saw head or vise to make angled cuts, typically up to 45°.

Kerf – The width of the cut made by the blade, determined by the blade's thickness and tooth set.

Cutting Load – The resistance or force the blade encounters while cutting.

Tooth Pitch – The distance between individual teeth on the blade.

TPI (Teeth Per Inch) – The number of teeth per inch of blade; higher TPI is better for thinner materials. **Tooth**

Set – The pattern in which teeth are bent outward to allow clearance for the blade body.

Blade Material – The composition of the blade; usually high-speed steel (HSS), bi-metal, or carbide-tipped.

Blade Life – The duration or number of cuts a blade can make before needing replacement.

Manual Bandsaw – A saw where the operator controls all aspects of feeding and operation.

Semi-Automatic Bandsaw – A saw with partially automated functions, like hydraulic head or vise operation.

Downfeed Pressure – The amount of force applied by the saw head as it descends into the material.

Work Stop – A mechanical stop used for making repeatable length cuts quickly.

Chip Brush – A rotating brush that cleans chips from the blade teeth to prevent buildup and scoring.

Break-in Procedure – A gradual cutting method used when installing a new blade to extend its life.

Vibration – Unwanted blade or machine movement caused by dull blades, improper tension, or feed speed.

Back-up Bearings – Bearings that support the rear edge of the blade to prevent it from being pushed backward under pressure.

1809 Industrial Park Dr
Grand Haven, MI 49417
www.dakecorp.com

Overview

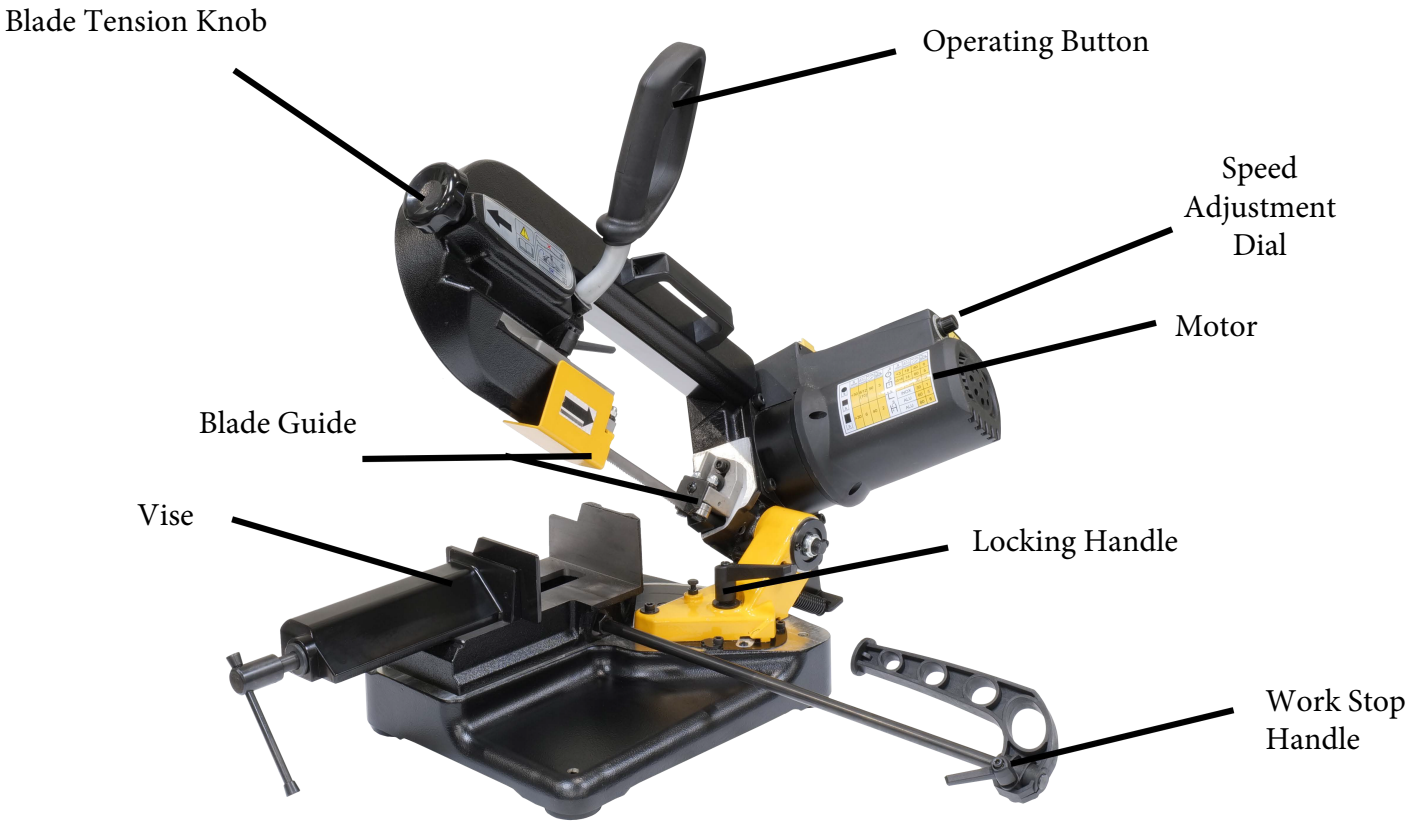

Blade Tension Knob: To keep blade at proper tension turn the screw handle until it is at tight as possible. Check every 8 operating hours and retighten to compensate for possible stretching of the blades. Consult your blade manufacturer for the proper PSI tension.

Operating Button: When pressed, starts the blade turning.

Speed Adjustment Dial: Adjusts the speed (RPM) of the blade.

Motor: Motor that provides power to the machine.

Locking Handle: Locks the machine in place.

Pivot Handle: Allows the machine to pivot.

Vise: The vise can be positioned straight for a 90º cut or at any angle to cut at 45º. The vise swivel jaw adjusts automatically to any position of the stationary jaw.

Blade Guide: Supports and guide the blade during cutting operations.

1809 Industrial Park Dr
Grand Haven, MI 49417
www.dakecorp.com

SETUP AND ASSEMBLY

Inventory: One B:5 Horizontal Bandsaw, four rubber feet, one work stop rod, one work stop handle, hardware bag.

WARNING! DO NOT CONNECT THE MACHINE TO POWER INTIL ASSEMBLY IS COMPLETE.

THE BLADE HAS BEEN DE-TENSIONED FOR SHIPPING PURPOSES. THE BLADE WILL NEED TO BE RE-TENSIONED BEFORE OPERATION.

UNCRATING: Remove crating carefully. For ease in handling do not remove from packaging until machine has been moved to its approximate location. Remove any loose items and packing materials from the package and set them to the side.

LEVELING AND MOUNTING: Always place the rubber feet to the machine. This machine has 4 mounting holes that allow it to be secured to a worktable or other surface. Mounting the saw prevents it from moving and causing unexpected damage or injury. Two ways to mount the machine to a worktable are listed below.

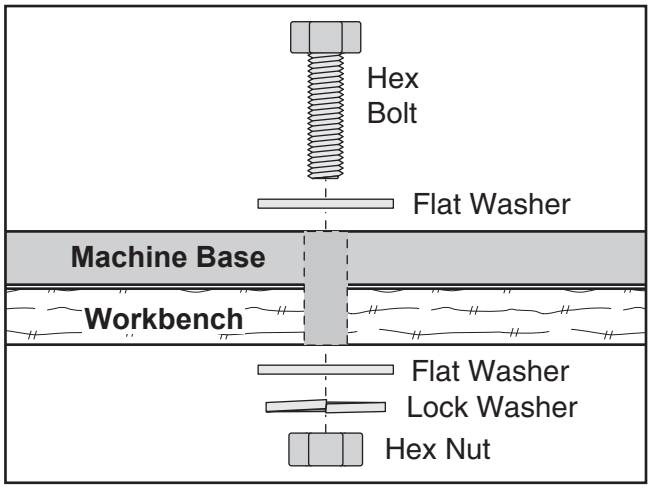

Mounting through the table

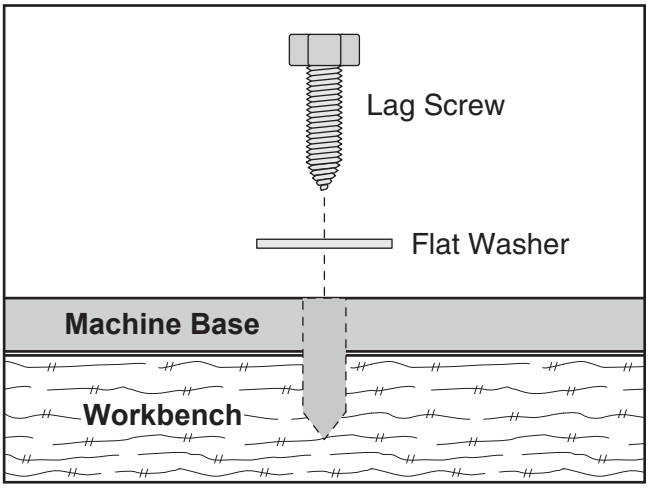

Mounting to the table

1. Tip the machine on its side and install the four rubber feet to the bottom base of saw. The rubber feet have holes that allow mounting.

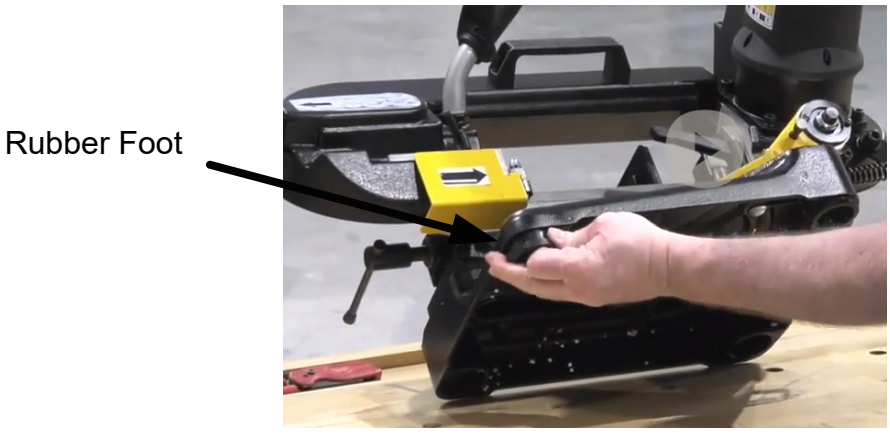

1809 Industrial Park Dr
Grand Haven, MI 49417
www.dakecorp.com

After leveling/mounting the machine, make sure there are no packing materials in or on the machine.

2. Press down on the machine and pull the locking pin out. This puts the bandsaw in the upright position.



3. Adjust the handle to the desired position and tighten the set screw with an Allen key.

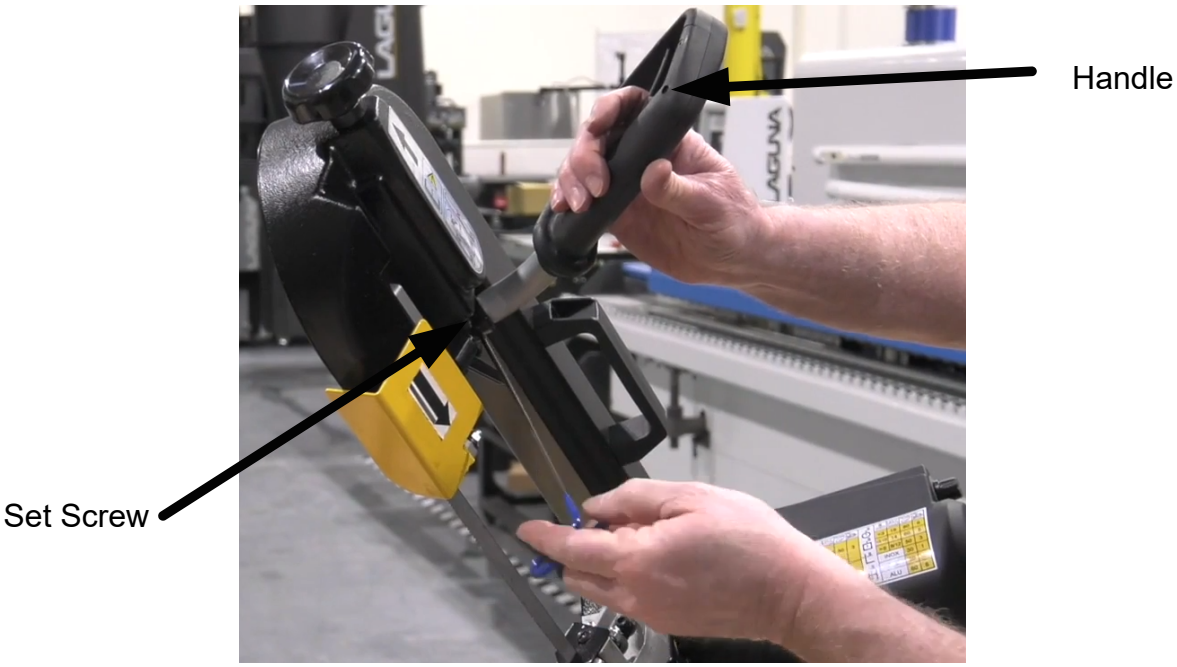

1809 Industrial Park Dr
Grand Haven, MI 49417
www.dakecorp.com

4. Insert the work stop rod into the machine and thread it to the machine. Tighten the lock nut with a 3/4 inch wrench.





5. Insert the bolt into the hole on the workstop handle.

a. Install the handle on the bolt



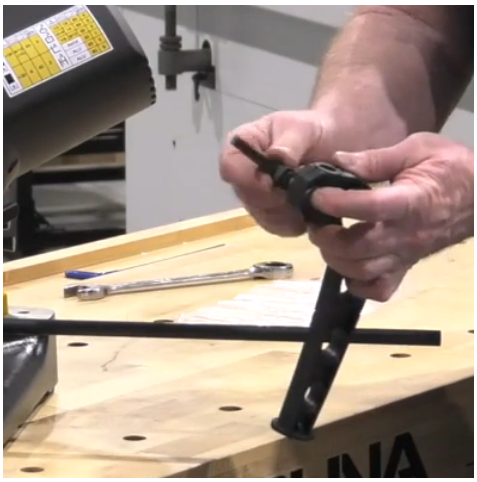

6. Press the handle on the work stop rod. (it may take a lot of force)





1809 Industrial Park Dr
Grand Haven, MI 49417
www.dakecorp.com

The blade has been de-tensioned for shipping purposes. the blade will need to be re-tensioned before operation.

Rotate the blade tension knob clockwise to tighten the blade. The blade needs to have a 1/4 inch deflection.

NOTE: Deflection is how much the blade bends or flexes sideways when pushed or stressed.

Blade Tension Knob



Test Run

WARNING!

Always disconnect machine from the power source before making any adjustments or repairs. Failure to comply may result in serious injury.

DO NOT start machine until all preceding setup instructions have been performed. Operating an improperly set up machine may result in malfunction or unexpect-ed results that can lead to serious injury, death, or machine/property damage.

CAUTION: Ensure motor and switch electrical components match the power supply.

Connect incoming power to the starter as per the diagram and local codes.

Do not operate the saw until blade alignment is verified and the blade is properly tensioned.

After assembly, test run the machine to check power connections and safety features.

If issues arise, stop the machine, disconnect from power, and resolve the problem before continuing. Refer to the Troubleshooting table in the manual for help.

The Test Run consists of verifying the following functions:

1. The motor powers up and runs correctly
2. The blade guide bearings are functioning properly.

Follow the steps below to test run the machine.

1. Clear all setup tools away from machine.

2. Put on safety glasses and secure loose clothing or long hair.

3. Turn variable-speed blade dial counterclock-wise to its lowest setting, 1.

4. Remove headstock locking pin and raise headstock all the way up.

5. Connect machine to power supply.

6. Turn machine ***ON,*** pull trigger switch to verify motor operation, and then let go of trigger switch and turn machine ***OFF***.
The motor should run smoothly and without unusual problems or noises.
The guide bearings should spin freely and without unusual problems or noises.

OPERATING THE MACHINE

OVERVIEW

WARNING! To reduce your risk of serious injury, read this entire manual BEFORE using machine.

WARNING! To reduce risk of eye injury from flying chips or lung damage from breathing dust, always wear safety glasses and a respirator when operating this machine.

WARNING! 1.NEVER USE BANDS WHICH ARE DAMAGED OR DEFORMED. EVER CLEAN THE SAW BAND WHILST IT IS IN MOTION

NOTE: If you are inexperienced with this machine, it is strongly recommended to seek additional training beyond this manual. Consider reading relevant books or magazines, or obtaining formal training before starting any projects. Laguna Tools will not be liable for accidents due to lack of training.

This overview gives novice operators a basic understanding of machine operation, making later sections easier to comprehend.

It is not an instructional guide. For specific operations, read the entire manual, seek training from experienced operators, and consult additional resources like
"how-to" books, trade magazines, or websites.

Before Use

•Before use, make sure that the position of the lower limit screw is correct.

•Make sure that the lower limit screw of the saw blade is at the tooth surface of the blade below the work surface.

•Make sure that the screw position of the lower limit switch is so that the band saw reaches the lower limit position and the power is turned off immediately to stop the band saw.

•Always clamp pieces firmly between the jaws without inserting other objects.

To cut a long work piece, use roll stand to support it.

IF USING A NEW BLADE, SLOWLY MAKE FIRST TWO OR THREE CUTS WITH SLIGHT PRESSURE, DOUBLING THE USUAL CUTTING TIME. THIS WILL ENSURE THE BLADE'S QUALITY AND LIFESPAN.

An operator completes the typical cutting operation(s) listed below:

1. Examines workpiece to make sure it is suitable for cutting.

2. Raises headstock all the way.

3. Adjusts vise angle, then securely clamps workpiece in vise.

4. Adjusts upper blade guide assembly as close to workpiece as possible.

5. Verifies blade is properly tensioned.

6. Adjusts variable-speed dial to ensure correct cutting speed for workpiece.

7. Ensure workpiece and machine are stable and there are no obstructions in the way of cutting path.

8. Puts on safety glasses and respirator.

9. Presses green button on ON/OFF switch to turn machine ON.

10. Starts blade by pulling trigger switch and waits for blade to reach full speed.

11. Slowly lowers blade into workpiece until cut is finished.

12. Stops blade by releasing trigger switch.

13. Presses red button on ON/OFF switch to turn machine OFF.

14. Raises headstock and removes workpiece.

1809 Industrial Park Dr
Grand Haven, MI 49417
www.dakecorp.com

ADJUSTMENTS

Tensioning and De-tensioning the Blade

1. Turn the blade tension knob (A in Fig 1) clockwise to increase the blade tension.
2. Turn the blade tension knob counterclockwise to decrease the blade tension.

   NOTE: The blade should be tensioned with 1/4 deflection

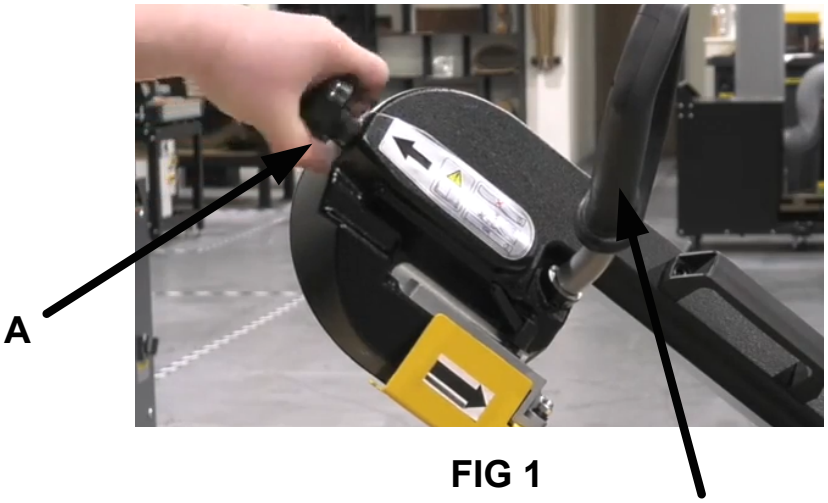

FIG 1

Adjusting the Handle

1. Use an Allen key to loosen the set screw (B in Fig 2) and move the handle to the desired position.
2. Tighten the set screw after adjustment.

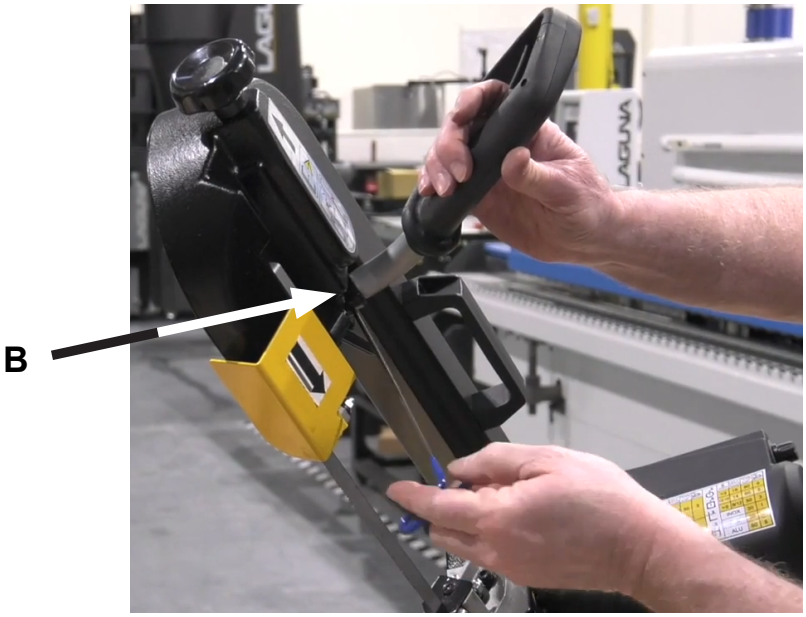

FIG 2

Adjusting the Bottom Stop

The bottom stop is a screw that prevents the saw from going past a certain point when cutting.

1. Use an wrench to loosen the set nut (C in Fig 3).
2. Adjust the screw to the desired postion.
3. Tighten the set nut after adjustment.

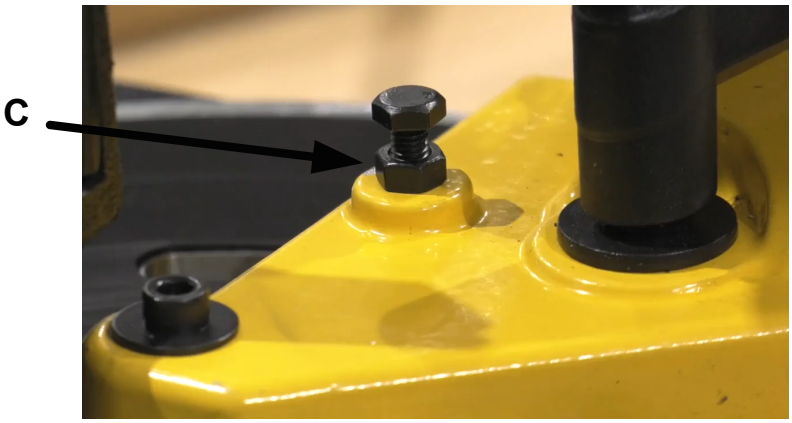

FIG 3

1809 Industrial Park Dr
Grand Haven, MI 49417
www.dakecorp.com

ADJUSTMENTS

Adjusting the Blade Speed

1. Turn speed adjustment dial (D, in Fig 3) clockwise to increase blade speed.

2. Turn speed adjustment dial (D, in Fig 3) counterclockwise to decrease blade speed.

   NOTE: For speeds and feeds guide, refer to the section "Speed Feed Material Guide" or the label that is on the motor of the saw.



FIG 4

Adjusting the blade guide

1. Loosen the locking handle (J in FIG 4).
2. Slide the blade guide (I in FIG 4) to position it closer to or farther from the piece to be cut.
3. Lock the handle after adjustment.

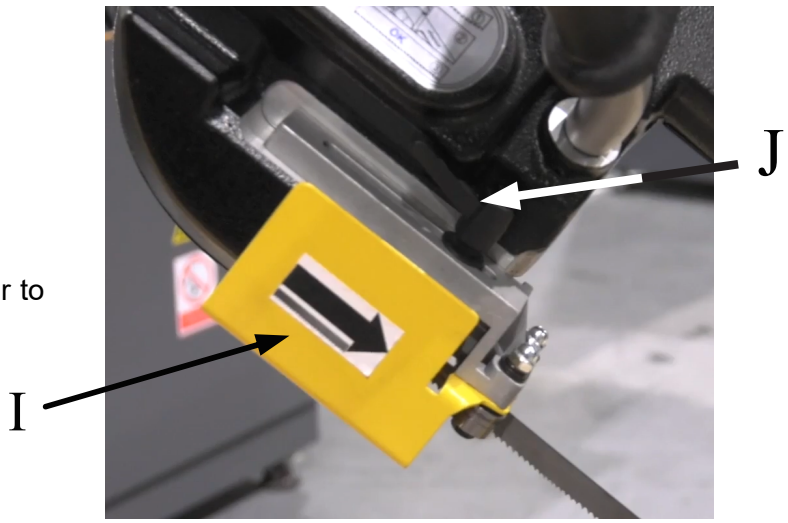

FIG 5

Adjusting the Cutting Angle

The saw can be adjusted to any angle from 0-60 degrees. Unlock the locking handle (L in FIG 5) and set to desired angle. Lock the locking handle after adjustment.

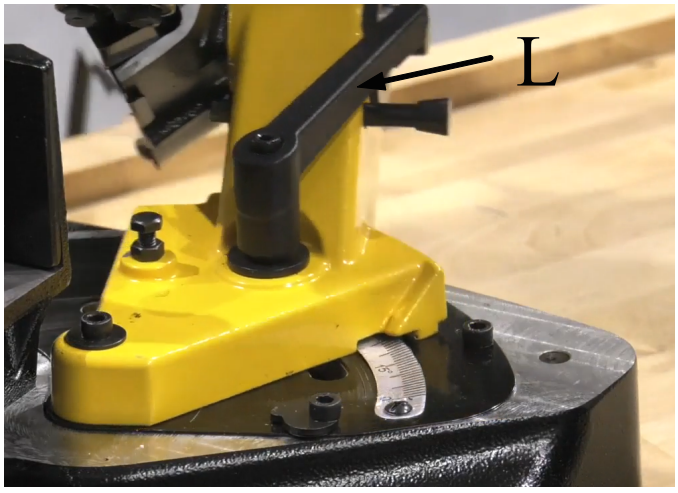

FIG 6

1809 Industrial Park Dr
Grand Haven, MI 49417
www.dakecorp.com

Adjusting and Using the Vise

1. Turn vise handle (see Figure 23) counterclockwise to relieve any pressure on vise jaws.

2. Place workpiece flat on the vise table.

3. Finish tightening movable jaw against workpiece with vise handle.

Note: Figure 8 shows correct methods of securing different workpiece shapes.



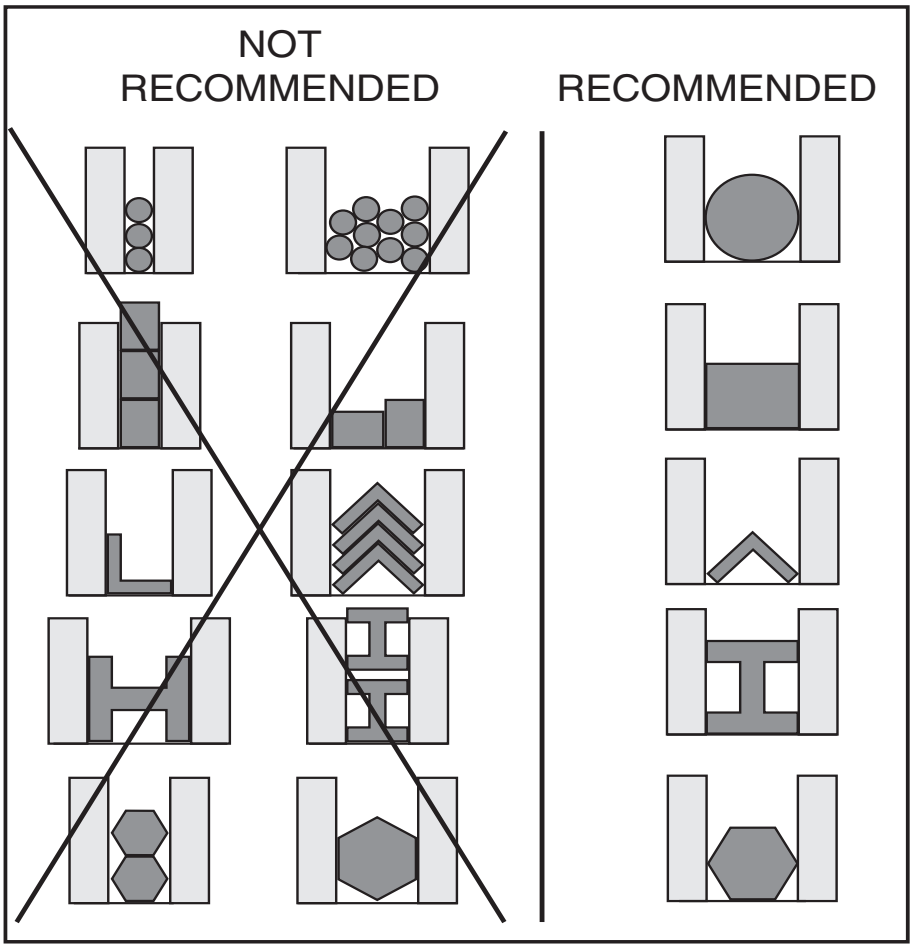

Figure 8. Example of work holding options by material shape.

1809 Industrial Park Dr
Grand Haven, MI 49417
www.dakecorp.com

CHANGING THE BLADE

WARNING! All saw blades are dangerous and may cause personal injury. To reduce the risk of being injured, wear leather gloves when handling and uncoiling or changing saw blades.

WARNING! Always disconnect machine from the power source before making any adjustments or repairs. Failure to comply may result in serious injury.

Blades should be changed when they become dull, damaged, or when you are using materials that require a blade of a certain type or tooth count.

To change blade on bandsaw:

1. Disconnect the machine from power.
2. Raise the headstock fully.
3. Remove all wheel cover screws (see Figure 14).
4. Move the blade guard to the left.
5. Clean chips and shavings with a brush or vacuum.
6. Loosen the blade tension knob.
7. Remove the blade from the wheels and guide bearings (see Figure 15).
8. Install the new blade between the guide bearings (see Figure 15).

   Note: Ensure the blade teeth face the direction of blade travel (see Figure 16). Some blades have a directional arrow as a guide.

9. Adjust the blade so the back is against the wheel shoulder (see Figure 16).



Figure 14. Cover Screws on Back of Saw

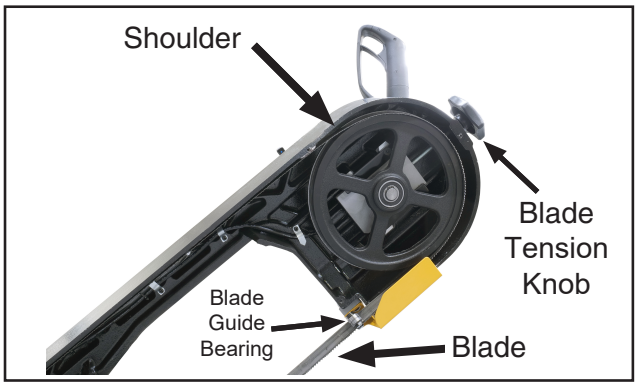

Figure 15. Blade against wheel shoulder.

WHEN USING A NEW BLADE, SLOWLY MAKE FIRST TWO OR THREE CUTS WITH SLIGHT PRESSURE, DOUBLING THE USUAL CUTTING TIME. THIS WILL ENSURE THE BLADE'S QUALITY AND LIFESPAN.

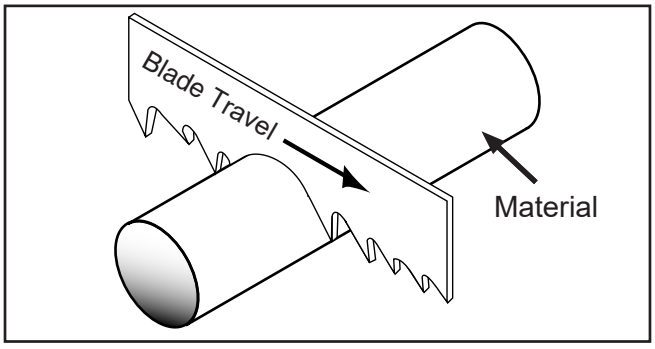

Figure 16. Example of blade cutting direction.

1809 Industrial Park Dr
Grand Haven, MI 49417
www.dakecorp.com

BLADE TOOTH SELECTION

WARNING! Always disconnect machine from the power source before making any adjustments or repairs. Failure to comply may result in serious injury.

For maximum cutting efficiency and lowest cost per cut, it is important to select the blade with the right number of teeth per inch for the material being cut. The material size and shape dictate tooth selection

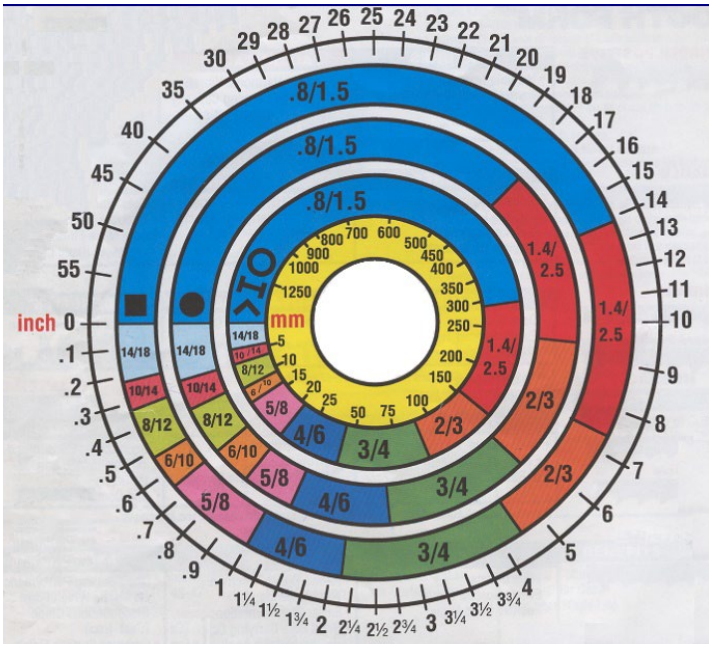

YOU NEED TO CONSIDER:

The width of the cut. That is, the distance in the cut that each tooth must travel from the point it enters the work piece until it leaves the work piece, and the shape of the work piece. Use the chart above to assist with tooth selection.

- Squares, Rectangles, Flats (Symbol: ■)

  Locate the width of your work piece on the chart. (Inches on the outer circle and millimeters on the inner circle.) Select the tooth pitch on the ring marked with square which aligns with the width of the cut.

  Example: 6” (150mm) square, use a 2/3 Vari-Tooth.

- Round Solids (Symbol: ●)

  Locate the diameter of your work piece on the chart. Select the tooth pitch on the ring marked with the circle which aligns with the size of stock you are cutting.

  Example: 4” (100mm) round, use a 3/4 Vari-Tooth.

- Tubing, Pipe, Structural (Symbols: O, H, ^)

  Determine the average width of cut by dividing the area of the work piece by the distance the saw blade must travel to finish the cut. Select the tooth pitch on the ring marked with the tubing and structural shape which aligns with the average width you are cutting.

Example: 4” (100mm) outside diameter, 3” (75mm) inside diameter tubing.

4"(100mm) OD	=12.5 in^2 (79 cm^2)
3"(75 mm) ID	= 7.0 in^2 (44 cm^2)
Area	= 5.5 in^2 (35 cm^2)

Example: 5.5 in^2 (35 cm^2) / 4" (100mm) distance = 1.38” (35 mm) average width 1.38" (35 mm), use a 4/6 Vari-Tooth.

1809 Industrial Park Dr
Grand Haven, MI 49417
www.dakecorp.com

SPEED FEED MATERIAL GUIDE:

Material	Speed FPM (M/Min)
Carbon Steel	196~354 (60) (108)
Angle Steel	180~220 (54) (67)
Thin Tube	180~220 (54) (67)
Aluminum Alloy	220~534 (67) (163)
Copper Alloy	229~482 (70) (147)
Tool Steel	203 (62)
High-Speed Tool Steel	75~118 (25) (36)
Cold-Work Tool Steel	95~213 (29) (65)
Hot-Work Tool steel	203 (62)
Oil-Hardened Tool Steel	203~213 (62) (65)
Alloy Steel	111~321 (34) (98)
Mold Steel	246 (75)
Water Hardened Tool Stell	242 (74)
Stainless Steel	85 (26)
CR Stainless Steel	85~203 (26) (62)
Free Machining Stainless Steel	150~203 (46) (62)
Gray Case Iron	108~225 (33) (75)
Ductile austenitic Cast Iron	65~85 (20) (26)
Malleable Cast Iron	321 (98)

1809 Industrial Park Dr
Grand Haven, MI 49417
www.dakecorp.com

CHIP INSPECTION CHART

The best way to choose the cutting speed and feed rate is to inspect the chips created by the cut, which indicate the "chip load." Use the chip inspection chart to evaluate chip characteristics and decide whether to adjust the feed rate, pressure, blade speed, or all three.

Chip Appearance	Chip Description	Chip Color	Blade Speed	Feed Rate/ Pressure	Other Actions
	Thin & Curled	Silver	Good	Good	
	Hard, Thick & Short	Brown or Blue	Increase	Decrease	
	Hard, Strong & Thick	Brown or Blue	Increase	Decrease	
	Hard, Strong, Curled & Thick	Silver or Light Brown	Good	Decrease Slightly	Check Blade Pitch
	Hard, Coiled & Thin	Silver	Increase	Decrease	Check Blade Pitch
	Straight & Thin	Silver	Good	Increase	
	Powdery	Silver	Decrease	Increase	
	Coiled, Tight & Thin	Silver	Good	Decrease	Check Blade Pitch

Figure 21. Chip inspection chart

DAKE
a Laguna Tools Company

1809 Industrial Park Dr
Grand Haven, MI 49417
www.dakecorp.com

TROUBLESHOOTING

Problem	Possible Cause(s)	Possible Solution(s)
Vibration when operating or cutting.	1. Loose or damaged blade. 2. Bandsaw wheels have contaminants loaded up on wheel surface. 3. Bent, damaged or dull blade. 4. Machine component loose. 5. Worn wheel bearing. 6. Wheel bent/worn.	1. Tighten or replace blade. 2. Remove blade; clean bandsaw wheels. 3. Replace blade . 4. Fix/replace fan cover; replace loose/damaged fan. 5. Check/replace wheel bearing. 6. Check/replace wheel and wheel bearing.
Ticking sound when saw is running.	1. Blade missing teeth. 2. Blade weld contacting blade guides. 3. Blade weld may be failing.	1. Replace blade . 2. Replace blade if excessive ticking. 3. Cut and reweld blade, or replace blade.
Machine or blade bogs down in cut.	1. Feed rate too fast; blade speed too low. 2. Blade tension too low. 3. Blade gullets loading up with chips. 4. Blade dull, wanders, or gets pinched in cut. 5. Blade TPI too coarse.	1. Reduce feed rate ; increase blade speed . 2. Increase blade tension . 3. Install blade with more suitable TPI or tooth style for cooler cuts. 4. Replace blade or replace guide bearings 5. Use blade with at least 2 teeth contacting material at all times
Cuts are not square, or the intended angle is incorrect.	1. Loose angle adjustable handle or vise crank. 2. Blade not square to table.	1. Tighten loose angle adjustable handle or vise crank . 2. Adjust blade square to table.
Blade dulls prematurely, or metal sticking to the blade.	1. Incorrect feed/speed. 2. Blade gullets loading up with chips. 3. Blade improperly broken in.	1. Adjust feed rate or blade speed. 2. Use blade with larger gullets/fewer TPI . 3. Replace blade ; complete blade break in procedure.
Blade wears on one side or shows overheating.	1. Blade guides worn or misadjusted. 2. Blade support inadequate. 3. Dull/incorrect blade.	1. Re-adjust/replace. 2. Tighten blade guide close to workpiece as possible. 3. Replace blade.
Blade tracks incorrectly, or comes off wheels.	1. Feed rate too fast/wrong TPI. 2. Blade tension too low. 3. Blade bell-mouthed. 4. Blade guide bearings need adjustment. 5. Metal chip buildup on wheels.	1. Reduce feed rate/pressure ; decrease blade TPI . 2. Increase blade tension 3. Install new blade ; regularly remove tension from blade when not in use. 4. Adjust blade guide bearings. 5. Clean metal chips from wheels.
Cuts are crooked.	1. Feed rate too fast; blade speed too low. 2. Guide bearings assembly too far from workpiece. 3. Blade tension too low. 4. Blade dull. 5. Headstock is loose. Headstock pivot bolt/bushings loose or worn.	1. Reduce feed rate; increase blade speed. 2. Re-adjust. 3. Increase blade tension. 4. Replace blade. 5. Remove/clean/lubricate/readjust bushing/bolt/nut.

1809 Industrial Park Dr
Grand Haven, MI 49417
www.dakecorp.com

TROUBLESHOOTING CONT'D

Symptom	Possible Cause	Possible Solution
Machine does not start, or power supply breaker immediately trips after startup.	1. Incorrect power supply voltage or circuit size. 2. Power supply circuit breaker tripped or fuse blown. 3. Wiring broken, disconnected, or corroded. 4. Potentiometer/variable-speed dial at fault. 5. ON button at fault. 6. Motor brushes at fault. 7. Motor at fault.	1. Ensure correct power supply voltage and circuit size. 2. Ensure circuit is sized correctly and free of shorts. Reset circuit breaker or replace fuse. 3. Fix broken wires or disconnected/corroded connections. 4. Test/replace. 5. Replace switch. 6. Replace motor brushes. 7. Test/repair/replace.
Machine stalls or underpowered.	1. Feed rate too fast; blade speed too low. 2. Machine undersized for task. 3. Blade too course for material being cut. 4. Blade slipping on wheels. 5. Motor overheated. 6. Motor at fault.	1. Reduce feed rate/pressure; increase blade speed. 2. Use correct/sharp blade; reduce feed rate/pressure. Correct blade cut alignment to eliminate binding. 3. Use correct blade for operation. 4. Adjust blade tension . 5. Clean motor, let cool, reduce workload, or replace brushes. 6. Test/repair/replace.
Machine has vibration or noisy operation.	1. Saw component loose. 2. Blade at fault. 3. Motor is noisy.	1. Retighten/replace damaged bolts/nuts. 2. Replace/resharpen blade. 3. Replace brushes.

1809 Industrial Park Dr
Grand Haven, MI 49417
www.dakecorp.com

MAINTENANCE

As with any machine, to ensure optimal performance you must conduct regular maintenance.

Failure to follow maintenance procedures will void the warranty.

Maintenance Task	Frequency	Purpose / Notes
Check blade tension	Daily	Ensure correct tension for accurate cuts and blade life
Inspect blade for damage or wear	Daily	Prevent buildup and ensure smooth operation
Inspect blade for damage or wear	Daily	Replace if teeth are dull, missing, or cracked
Lubricate blade with coolant/oil (if applicable)	Daily	Prevent overheating and increase blade longevity
Inspect guide bearings and replace if noisy or loose	Daily	Maintain blade tracking and cut precision
Check alignment of blade guides and blade tracking	Daily	Keep cuts straight and reduce wear
Tighten loose bolts, screws, or fasteners	Weekly	Prevent parts from vibrating loose
Inspect drive belts for wear or slack	Weekly	Replace or adjust as needed
Inspect electrical connections and switches	Monthly	Prevent electrical faults or safety issues
Check motor brushes and commutators (if motor is brush-type)	Quarterly	Prevent motor failure
Inspect and test safety guards and emergency stop functions	Quarterly	Ensure operator safety
Inspect entire machine for wear, corrosion, or misalignment.	Annually	Catch issues before they become major problems
Conduct full safety inspection	Annually	Ensure compliance with safety regulations

1809 Industrial Park Dr
Grand Haven, MI 49417
www.dakecorp.com

ELECTRIC SCHEMATIC

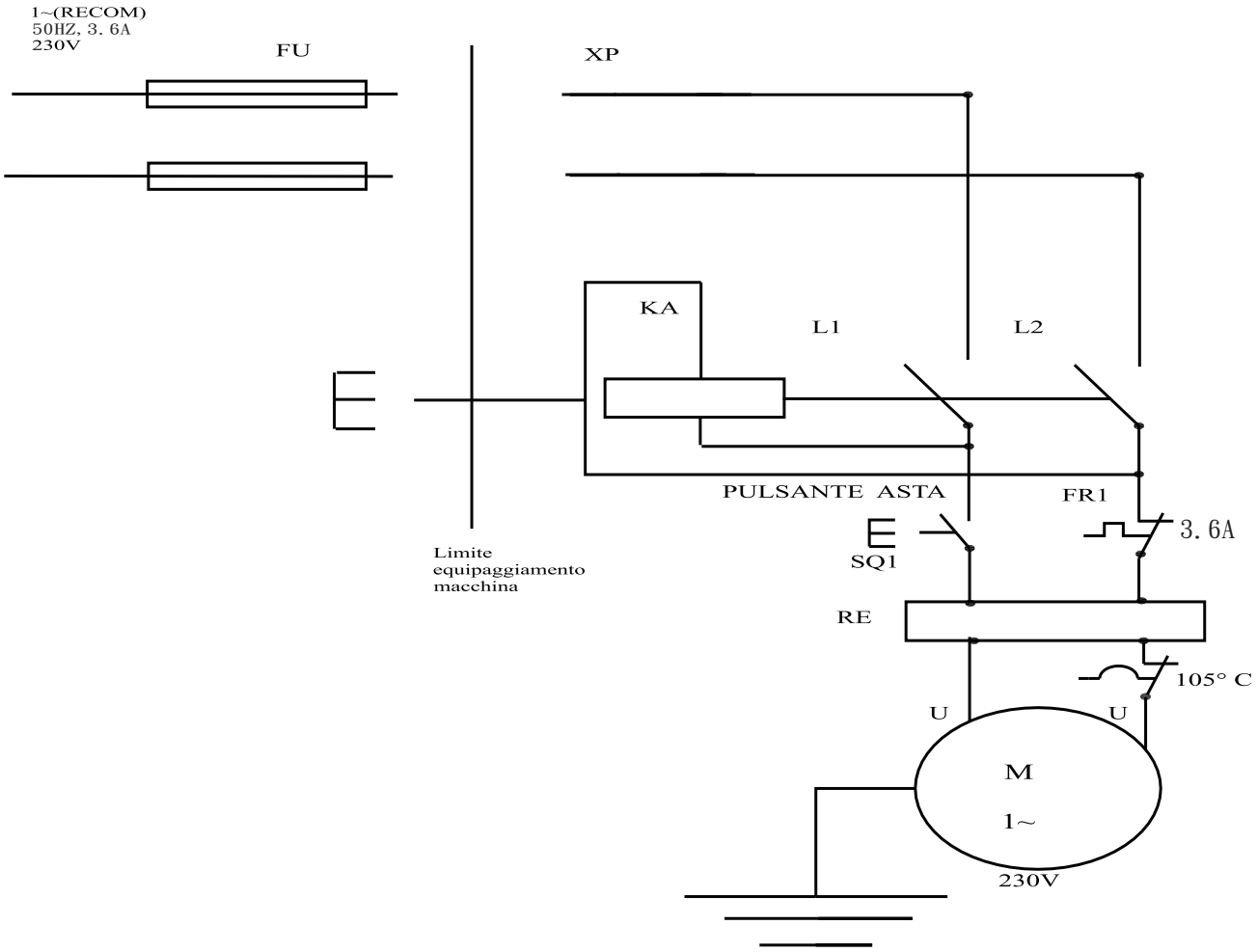

Symbol	Description (English)
KA	CE Protector
SB1	Stop Switch (OFF)
SB2	General Switch (ON)
XP	Power Cable
SQ1	Start-Stop Switch
M	Motor 1010 W
FR1	Thermal Protector
RE	Inverter

1809 Industrial Park Dr
Grand Haven, MI 49417
www.dakecorp.com

EXPLODED VIEWS & PARTS LISTS

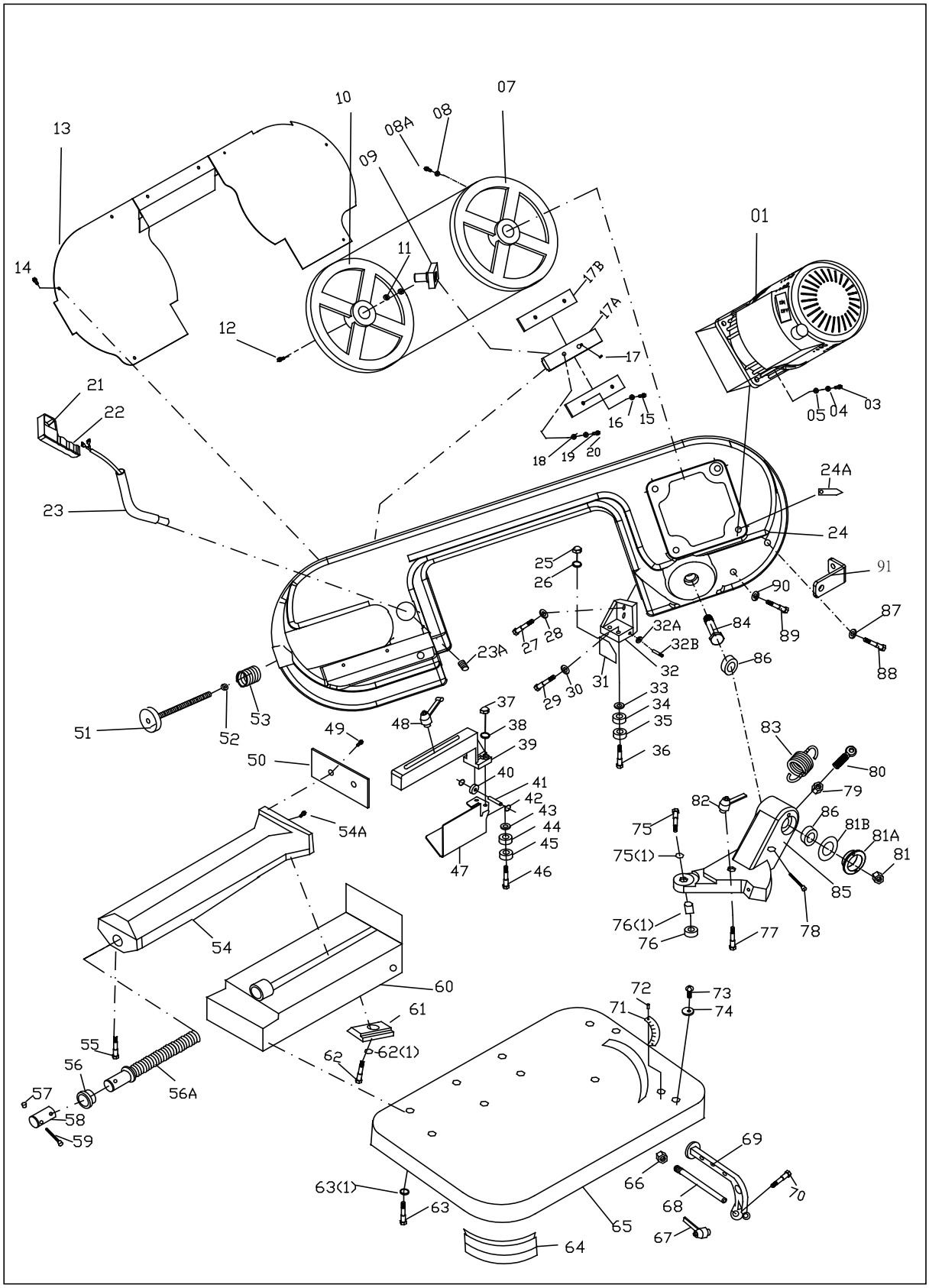

1809 Industrial Park Dr
Grand Haven, MI 49417
www.dakecorp.com

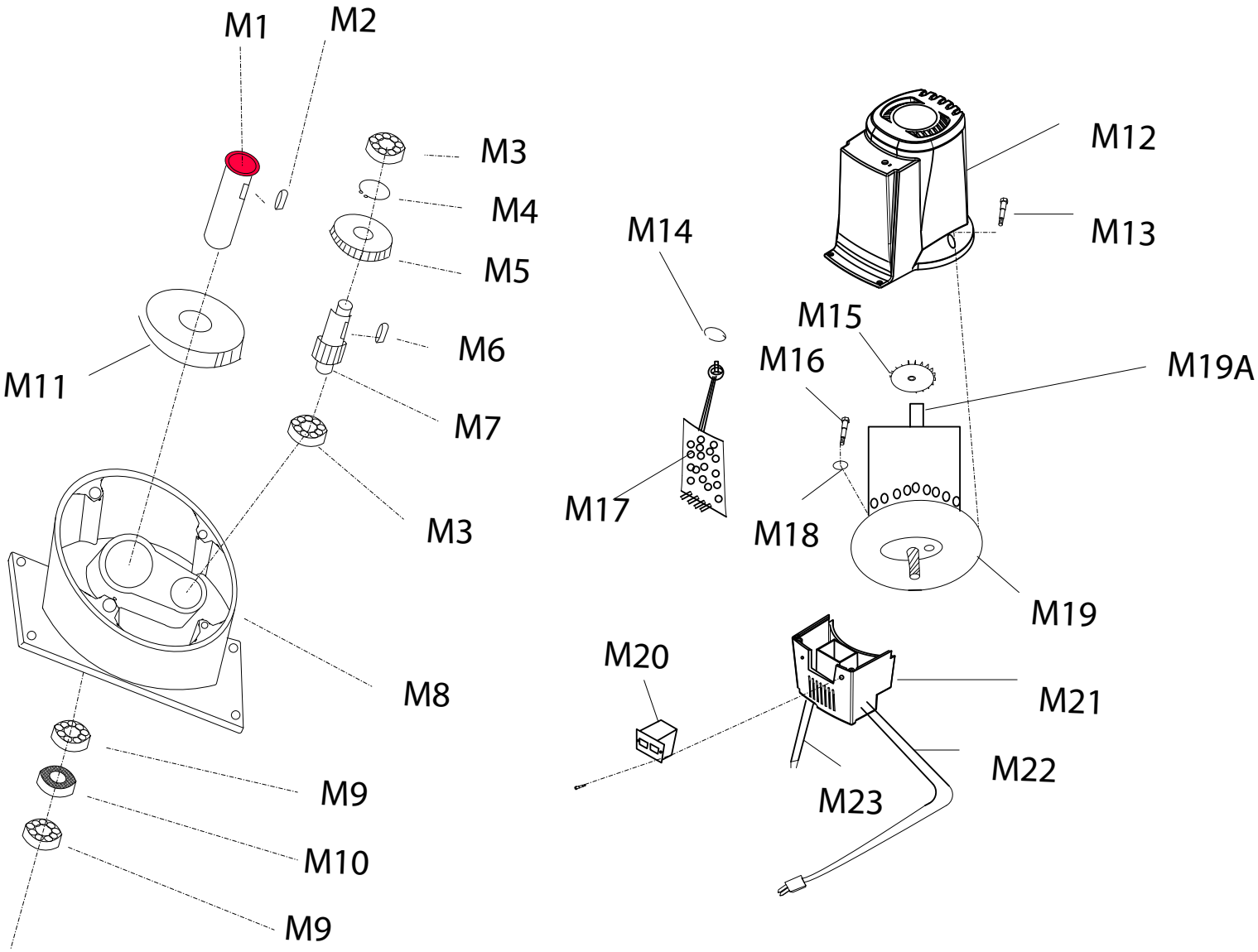

DAKE
a Laguna Tools Company

1809 Industrial Park Dr
Grand Haven, MI 49417
www.dakecorp.com

NO	Description	Q'ty
1	MOTOR	1
3	SCREW	4
4	SPRING WASHER	4
5	WASHER	4
7	MOTOR FLYWHEEL	1
8	WASHER	1
8A	SCREW	1
9	DOG PIN	1
10	Return flywheel	1
11	Bearing	2
12	Screw	1
13	Body cover	1
14	Screw	4
15	Screw	4
16	Spring washer	4
17	SET Screw	1
17A	Blade tension sliding block	1
17B	Slide	2
18	Washer	4
19	Spring washer	4
20	Screw CAP	4
21	Limit switch	1
22	Handle	1
23	Tube	1
24	Body frame	1
24A	Blade	1
24B	Shaft plate	4
25	Nut	2
26	Washer	2
27	Screw CAP	2
28	Washer	2
29	Screw CAP	1
30	WASHER	1
31	Chip fence	1
32	Fixed blade guide plate	1
32A	Bearing	1
32B	Pin	1
33	Washer	2
34	Bearing	2
35	Bearing	2
36	Bias axis	2
37	NUT M6	2
38	Washer M6	2
39	Arm	1
40	Bearing	2
41	Pin	2
42	Washer M5	2
43	Washer M6	2
44	Bearing	2
45	Bearing	2
46	Bias axis	2
47	L.blade guard	1
48	Bolt	1
49	Screw	1
50	Vice plate	1

NO	Description	Q'ty
51	Handle wheel	1
52	Bush	1
53	Washer M10	8
54	Vice	1
54A	Nut M10	1
55	SET Screw	1
56A	Acme Screw	1
60	Fence base	1
61	Locking seat	1
62	Screw	1
62(1)	Spring washer	1
63	Cap Screw	6
63(1)	Spring washer	1
64	Rubber pad	4
65	Base	1
66	Nut	1
67	Bolt M6	1
68	Rod stock stop	1
69	Stop bracket	1
70	Screw 6*20	1
71	Angle label	1
72	Screw	1
73	Cap Screw	2
74	WASHER	2
75	Cap Screw	1
75(1)	WASHER	1
76	NUT	1
76(1)	Bushing	1
77	Screw	1
78	Locking pin	1
79	NUT	1
80	Spring holder	1
81	Bearing nut	1
81A	Bushing	1
81B	Bearing cover	1
82	Bolt	1
83	Spring	1
84	Axis	1
85	Miter plate	1
86	Bearing	2
87	Washer	1
88	Screw	1
89	Screw	1
90	Nut	1
86	Bearing	2
87	Washer	1
88	Screw	1
89	Screw	1
90	Nut	1
91	Spring Board	1
94	Steel plate	1
95	plastic handle	1
96	CAP screw	2
97	NUT	2

NO	Q'ty	Description
M	1	
M3	2	bearing
M4	1	
M5	1	Gear
M8	1	Gear box
M9	2	Bearing
M10	1	Oil seal
M11	1	Main shaft
M12	1	Up cover
M13	3	Screw
M15	1	Fan
M16	1	Screw
M17	1	Electrical board
M19	1	Motor
M19A	1	Motor shaft
M20	1	Switch
M21	1	Down cover
M22	1	Plug
M23	1	Handel wire
M24	1	Knobs
M25	2	Screw

1809 Industrial Park Dr
Grand Haven, MI 49417
www.dakecorp.com

Please contact factory for current prices.

ORDERING INFORMATION

Parts are available for direct purchase from Dake or through a distributor. When placing a parts order, you will need to provide the part number, name of part, and model number. All parts shipped F.O.B. Factory in Grand Haven, MI.